Aqara

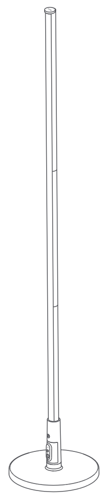

Floor Lamp T1 EN

Product Introduction

Aqara Floor Lamp T1 is a smart floor lamp designed for indoor wall accenting and ambient lighting. With its minimalist aesthetic design, it blends perfectly into any home style. Equipped with advanced RGBCWIC LED beads, it not only provides high-quality everyday white light for auxiliary lighting, but also delivers flowing, dynamic ambient colors. The T1 supports fine-tuned, smooth color adjustments, cool and warm color temperature, and adjustable brightness for mood-lighting and decorative lighting of living rooms, bedrooms, studies, gaming rooms, and home theater areas. Based on the advanced Zigbee and Thread dual protocols, it can be easily integrated into a smart ecosystem when paired with a hub, enabling rich scene-based control and whole-home smart automation, and unlocking an immersive home entertainment experience.

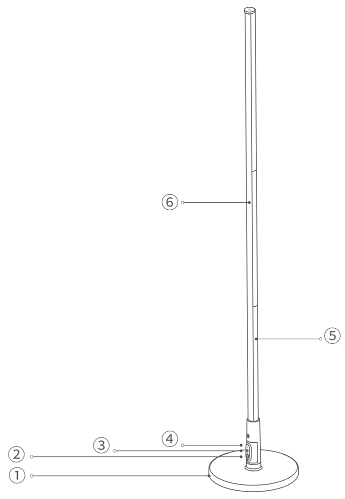

① Base
② Power port
③ Control button
④ Microphone hole
⑤ Pole
⑥ LED strip

⚠ Warnings

1. The device shall not be installed in water or flammable, explosive, high-temperature or a high-humidity environment or a location directly exposed to sunlight. The installation environment must be ventilated properly.
2. During assembly and use, do not alter or damage the structure of the floor lamp. Do not beat or strike it with heavy objects. To prevent short-circuiting and fire hazards, do not excessively bend, squeeze, or pull the internal wires of the lamp pole.
3. During the operation of the light, do not wrap or cover it with any object.
4. Avoid bringing the light into contact with acidic, alkaline, or other harsh chemicals. Use a soft, dry cloth for cleaning.
5. This product needs to be adapted to SELV power of 24 VDC, 1A.
6. The external flexible cord of this product cannot be replaced; if the cord is damaged, the entire product must be disposed of.
7. The light source of this product is not replaceable, when the light source reaches its end of life the whole product shall be replaced.
8. This product is designed only for improving the convenience of household life, and for status notifications. If the user violates the product instructions and this warning, the manufacturer is not responsible for any risks and property losses caused thereby.
9. This product is not waterproof and is designed exclusively for indoor installation; exposure to rain, moisture or outdoor environments may cause electric shock or fire hazards.
10. The servicing of the product should only be undertaken by the manufacturer or their service agent or a similarly skilled person.

Installation Guide

Warning: Before installing the product, the power supply must be disconnected to prevent electric shock.

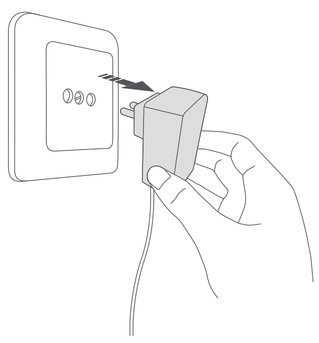

1.boxing check:

Count the package contents first and confirm that all parts are accounted for.

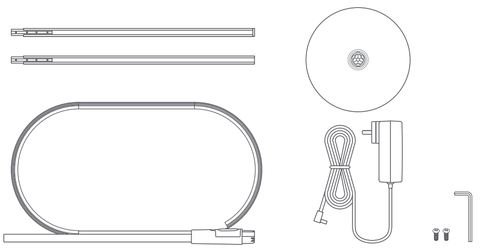

Assemble the first pole section:

Insert the first pole with the fixing pin into the main pole, peel off the protective sticker, and tighten the screw on the pin with the tool.

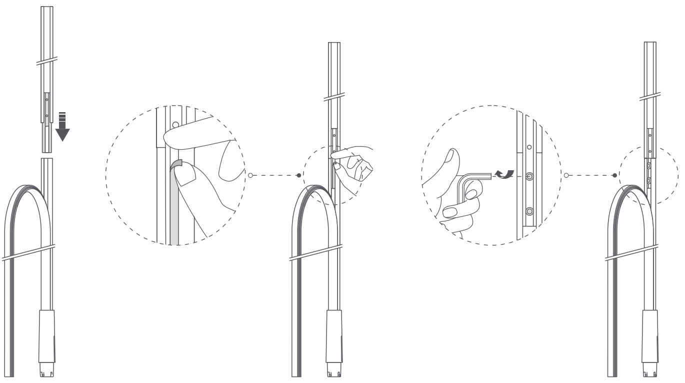

Assemble the second pole section:
Repeat this step. Insert the second pole with the fixing pin into the assembled pole, peel off the sticker and tighten the screw.

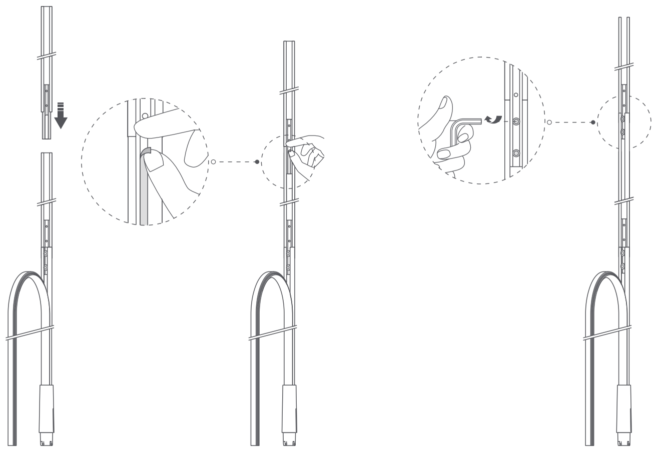

Align the top of the strip:

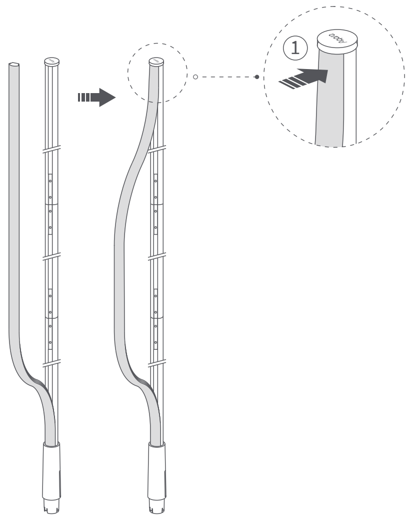

Keep the very top of the LED strip flush with the top of the tube, and press it into place.

Insert the strip:

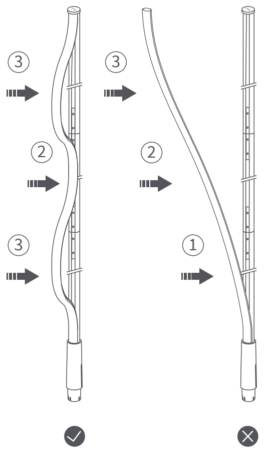

Squeeze the strip evenly from the middle toward both ends and press it into the aluminum tube. Note: Do not press it in from the bottom up.

Secure the base:

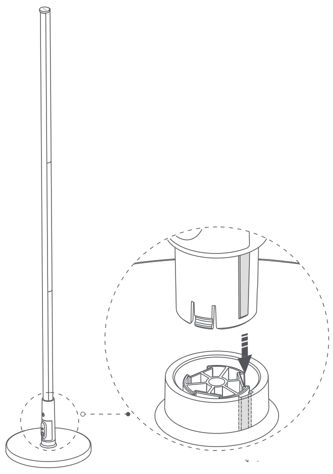

Align the bottom of the assembled pole with the hole in the base, insert it vertically and make sure it is firmly installed.

Power on:
Connect the power cord and turn on the power to start using your floor lamp.

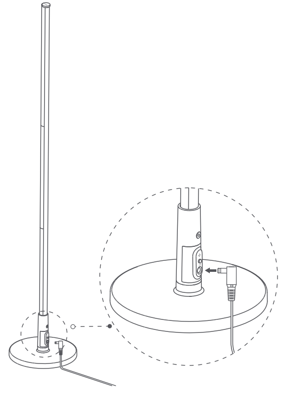

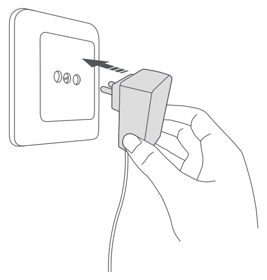

Quick Setup

To use the device with a particular Matter ecosystem (Thread Mode), a Matter Controller of said ecosystem and a Thread Border Router are required:

Press and hold the button for 5 seconds until the light slowly blinks twice. This indicates that the device is in pairing mode.

* When powered on for the first time, the device will automatically enter pairing mode.

Open the ecosystem's app that supports Matter, scan the Matter code on the manual or product, or enter the setup code to add the device to the app. Follow the app's instructions to complete the setup.

Download the Aqara Home app

Search for "Aqara Home" in the app store, or scan the QR code below to download the Aqara Home app.

Aqara Home

Open the app and tap "+" in the upper-right corner of the home page to enter the "Add Accessory" page;

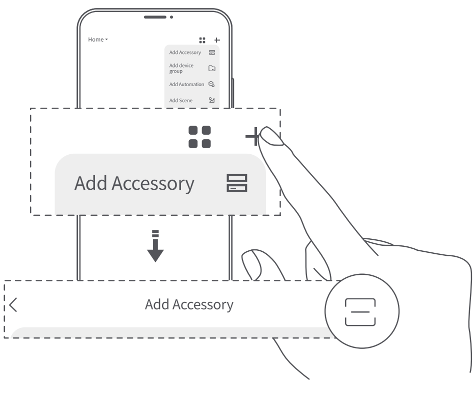

Find and select this device on the page, and follow the instructions.

* If adding fails, move the hub closer to this product, power it on again or reset the network, and then try again.

* During pairing, connect your phone to the same Wi-Fi network as the hub;

* Communication range verification: Triple-press the control button. A beep from the hub indicates effective communication between the device and the hub.

* You can also scan the QR code on the last page of this manual to bind the device to the Aqara Home app.

Button Operations

Button	Operation	Function
ON/OFF Button	Single Press	On/off control
	Double Press	Switch scenes (can be configured in the app)
	Triple Press	Verify communication range
	Press and hold for 5s	Reset network
	Press 10 times in quick succession	Restore factory settings

How to Switch Protocols

To switch protocols, you can either remove the device in the Aqara Home app or press and hold the button for 5 seconds to reset the network, and then repeat the pairing process. On the device pairing screen, tap "Switch Protocol" and select the desired protocol. Follow the app's instructions to complete the setup.

Note: Switching protocols is equivalent to restoring factory settings, and will erase all settings and data.

Reset the device

Actions	Results
Press the button and hold for 5s	Reset: Clears only the network pairing, without deleting other settings or records, except saved "My Scenes", which will be deleted.
Press the button 10 times in quick succession	Factory Reset: Restores the device to its original settings, clearing all configurations and data.

Product Specifications

Product Name	Floor Lamp T1
Product Model	LB-L18E / LB-L18D
Power Input (LED Strip)	24 V⎓ 1 A
Rated Input Power	24 W
Product Dimensions	⌧200 × 1420 mm
Color Temperature	2000 K - 9000 K + RGB
Wireless Connectivity	Zigbee, Thread, Bluetooth
Color Rendering Index	CRI 90
Operating Temperature	-10°C to 40°C
Operating Humidity	10-90% RH, non-condensing
Package Contents	Aqara LED Floor Lamp T1 × 1, Power adapter × 1, Screwdriver × 1, Spare screws × 2, User manual × 1
Luminous flux	1000 lm

Manufacturer: Lumi United Technology Co., Ltd.
Address: Room 801-804, Building 1, Chongwen Park, Nanshan iPark, No. 3370, Liuxian Avenue, Fuguang Community, Taoyuan Residential District, Nanshan District, Shenzhen, China.
Email: support@aqara.com
Online Customer Service: www.aqara.com/support