Smart Gate Lock U500 EN

Product Introduction

Smart Gate Lock U500 is a smart iron-gate lock designed for simplicity, convenience, and enhanced security. Dual-side fingerprint and key unlocking. Secure from both inside and out.

With Matter over Thread support, Smart Gate Lock U500 works seamlessly with a wide range of smart home ecosystems, including

Apple Home, Amazon Alexa, Samsung SmartThings and Google Home.

What's in the Box

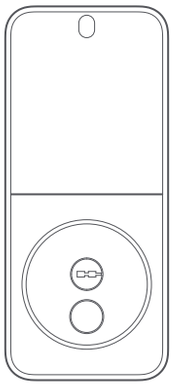

Inner Panel × 1

Outer Panel × 1

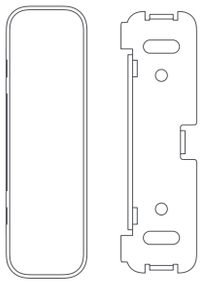

Strike Box × 1

User Manual × 1

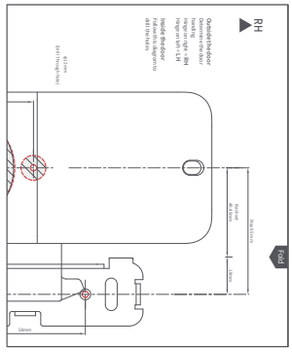

Installation Diagram × 1

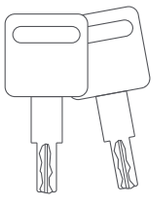

Mechanical Keys × 2

Strike Fixing Screw × 1
ST2.9 × 6mm

Strike Mounting Screws × 2
M4 × 12mm

Tailpiece x 1
50mm

Fixing Screws × 6
M4 × 8mm

Lock Mounting Screws × 2
M5 × 25mm

Silicone Plugs x 4

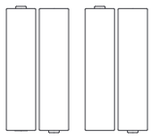

AA Batteries × 4

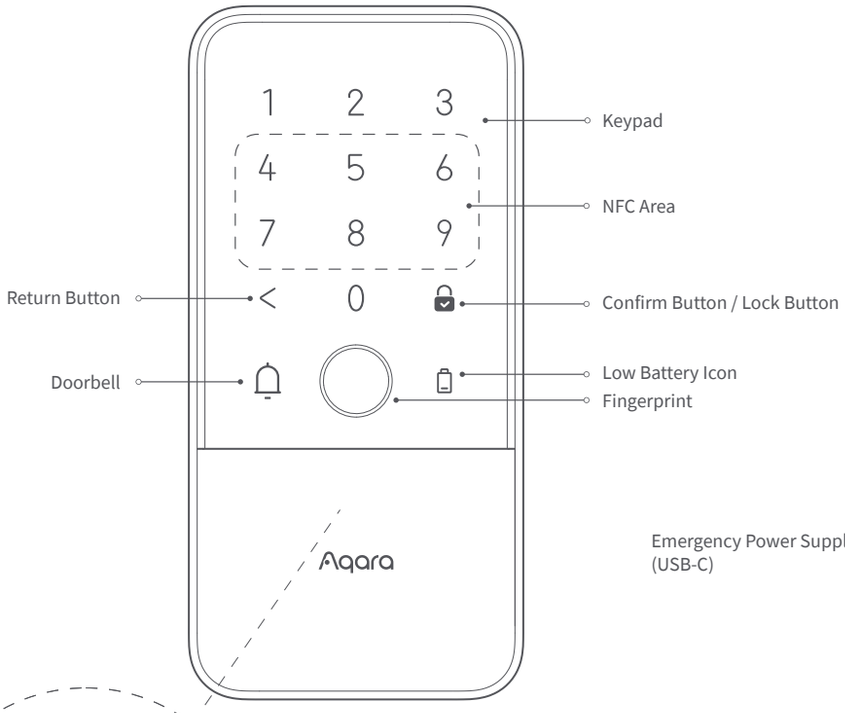

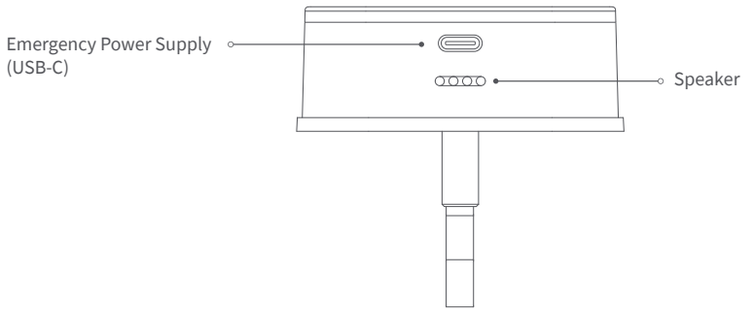

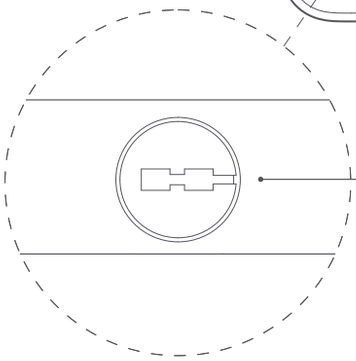

Keyhole
Tip: Push down the sliding guide plate to access the mechanical keyhole and unlock manually.

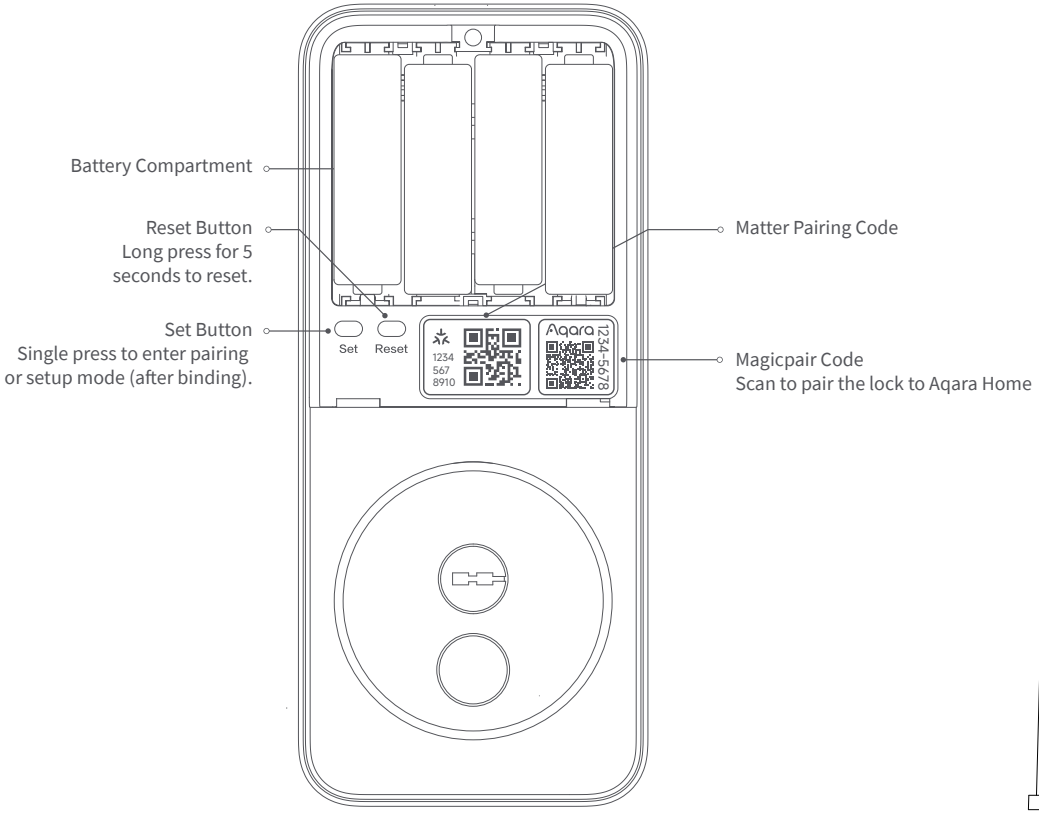

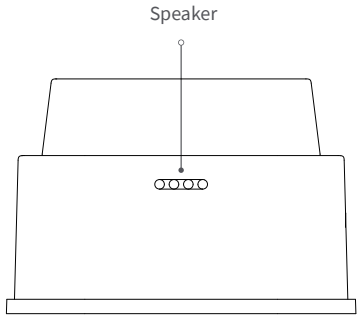

Instructions before Installation

Before using this product, you need to download the Aqara Home app and register an account. This is not necessary if you directly connect this product to a third-party ecosystem, however, unique features such as Door Unlocked Alert, Auto-Lock on Close, Night Latch mode, Do Not Disturb Mode and more will be unavailable to you.

Aqara Home

Sign up for an Aqara Home account, then add the Smart Gate Lock U500 and follow the app's instructions.

Product Support

Or scan the QR code to check the installation video

For FAQs, visit: https://store-support.aqara.com/products/smart-gate-lock-u500

A PH1/ PH2 standard Phillips head screwdriver is required for installation.

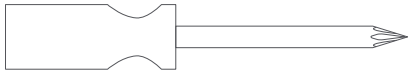

The following tools necessary only if you drill the holes by yourself: electric drill, 50 mm hole saw, 12 mm hole saw, M4 tap, and ruler.

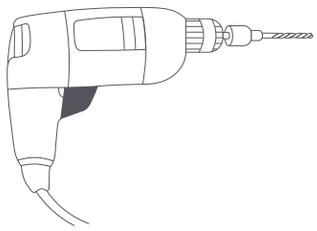

Drill

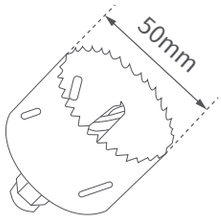

Hole Saws

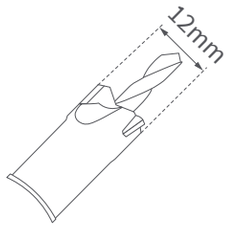

Hole Saws

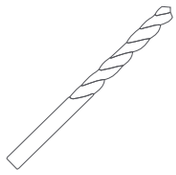

M4 Tap

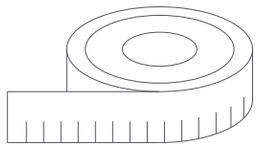

Tape Measure

Installation Requirements

Suitable for Iron Gate

Hole Diameter: ⌀12 mm × 2, ⌀50 mm × 1
Door Thickness: 22 - 28 mm
Backset: 40 - 45 mm
Door Gap: 3 - 7 mm
Modifications may be necessary if the door features different dimensions

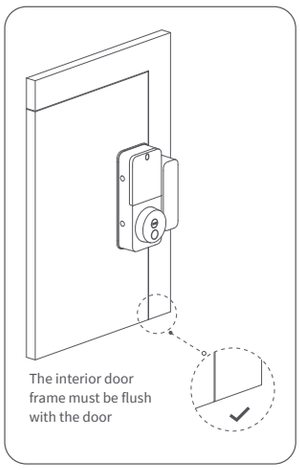

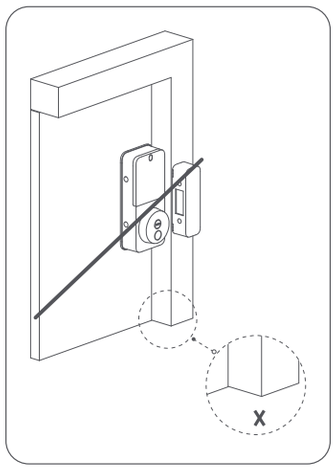

Device Installation & App Connection

1

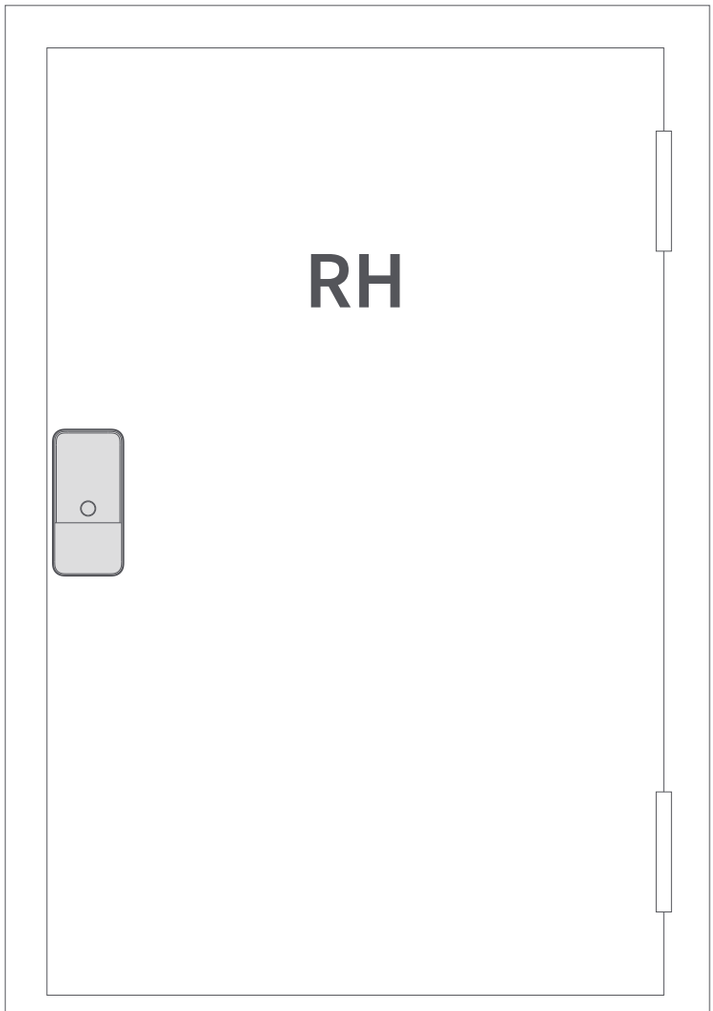

2

RH

1

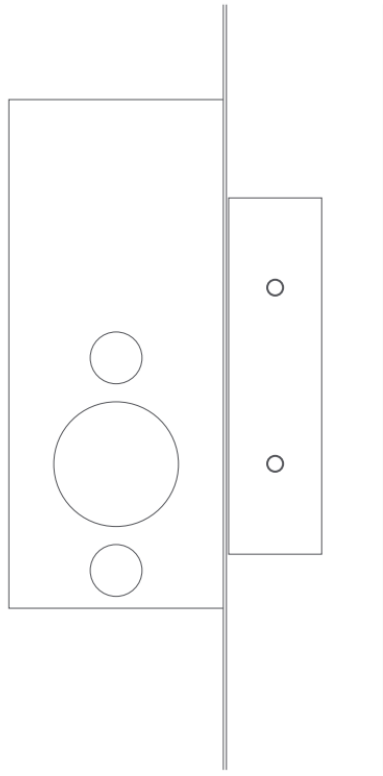

2

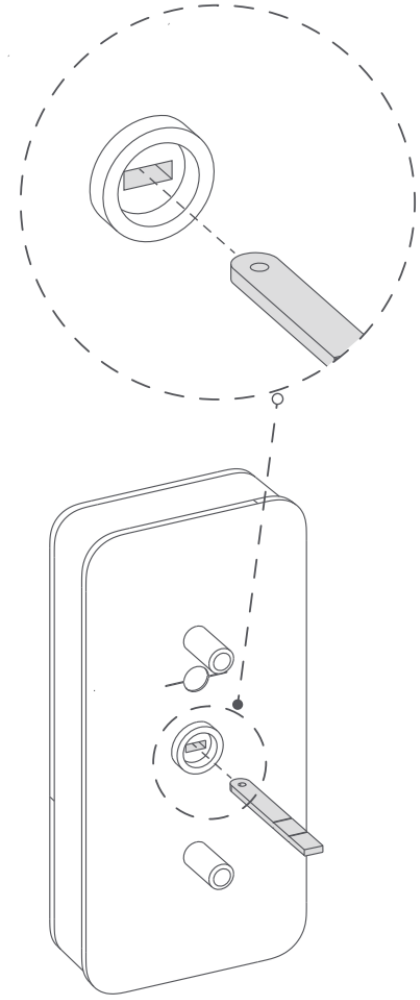

3

4

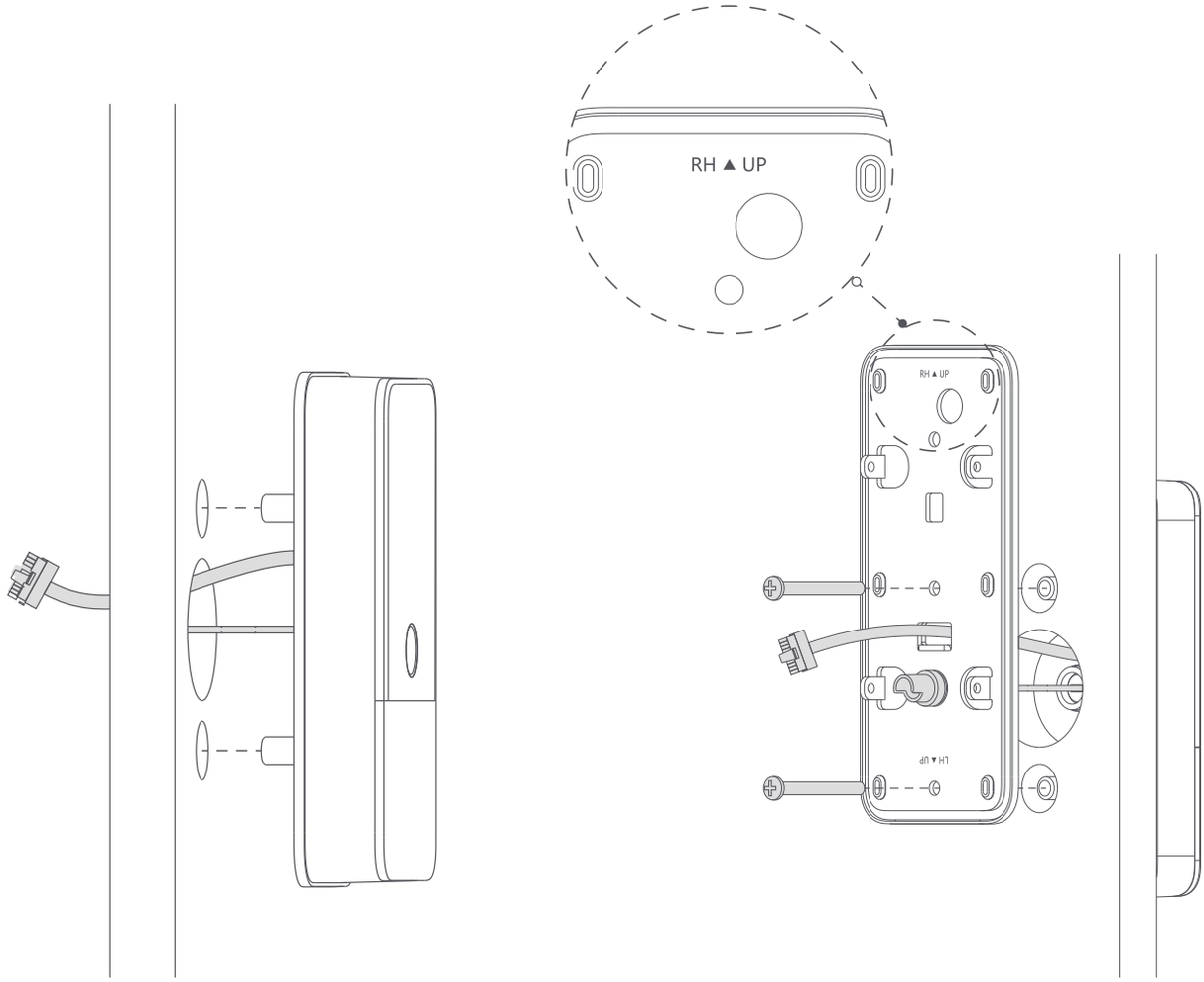

5

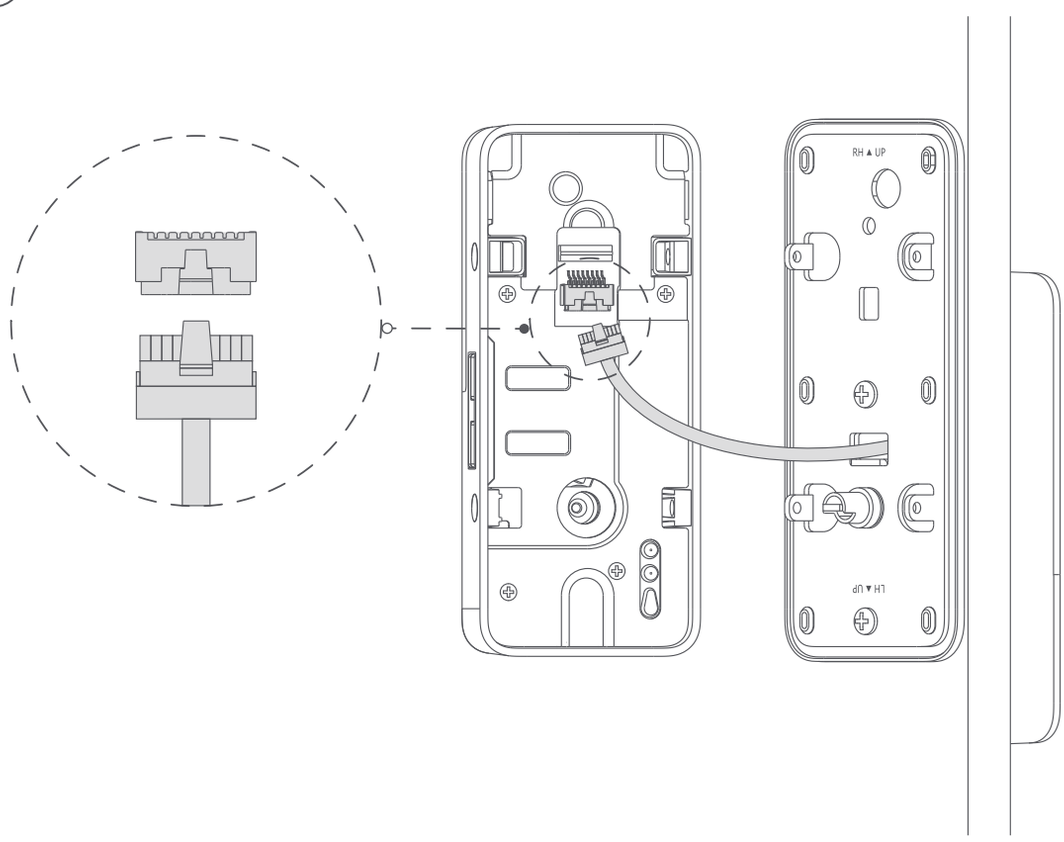

6

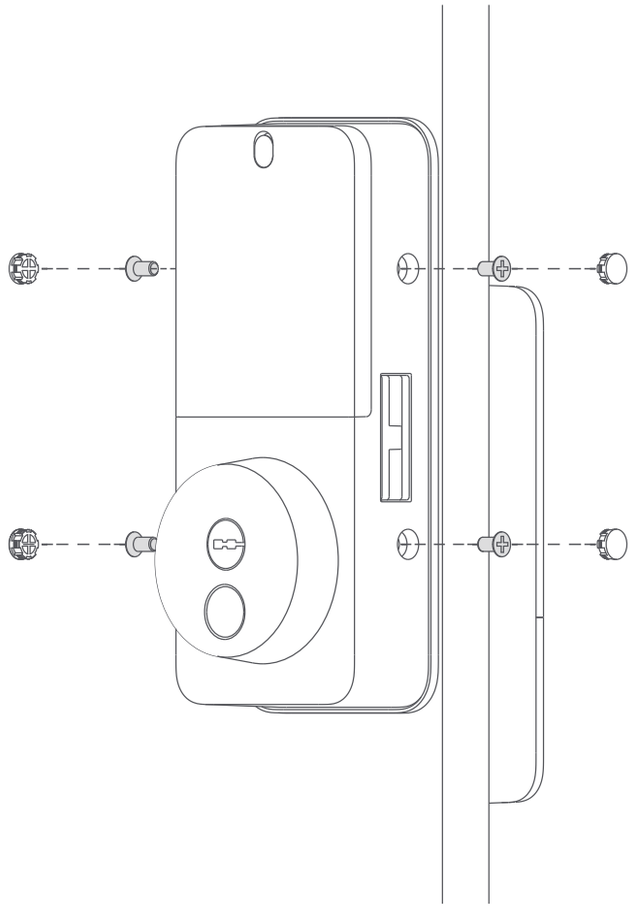

7

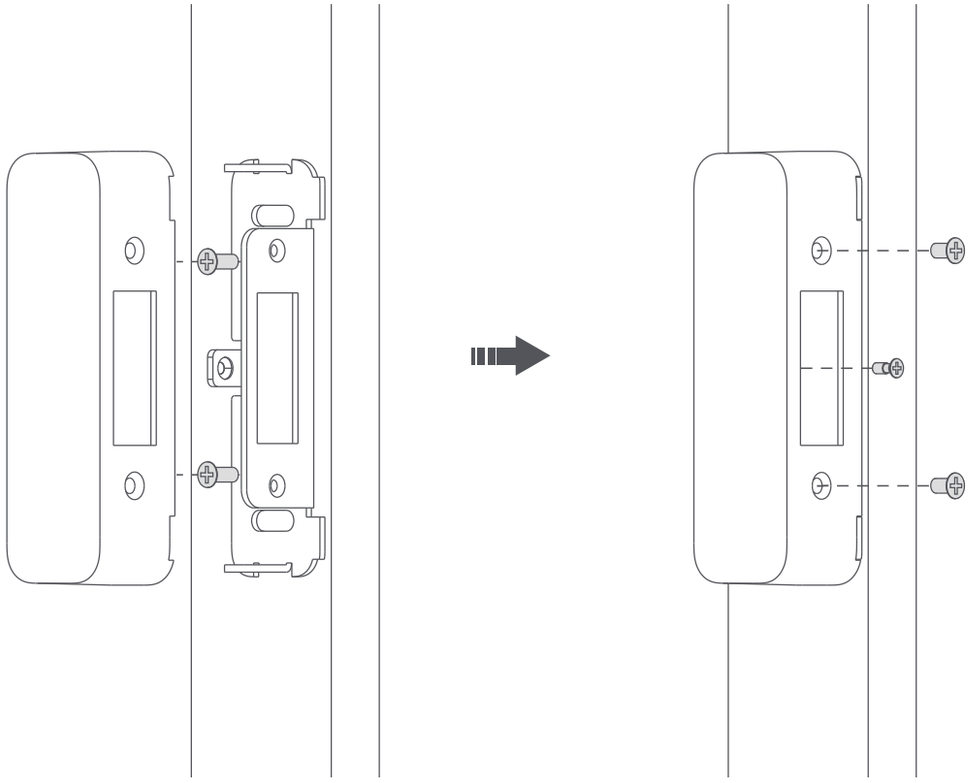

OR

LH

①

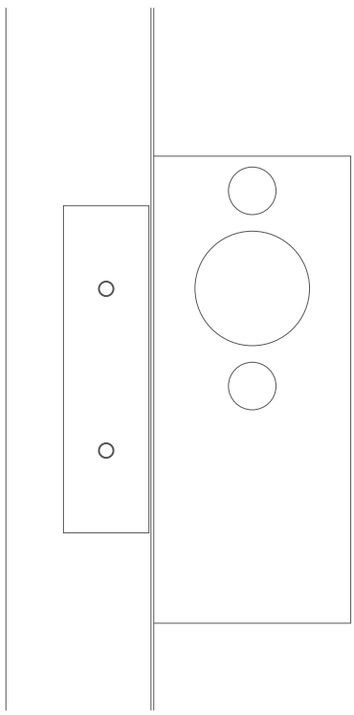

②

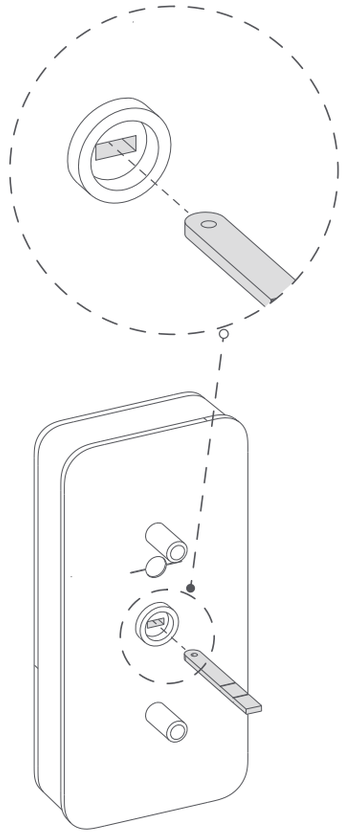

③

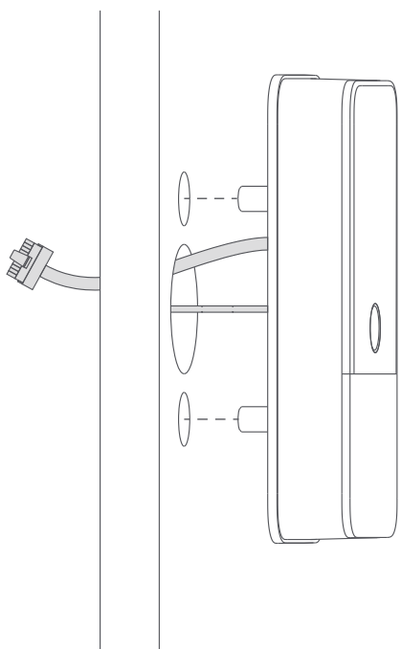

④

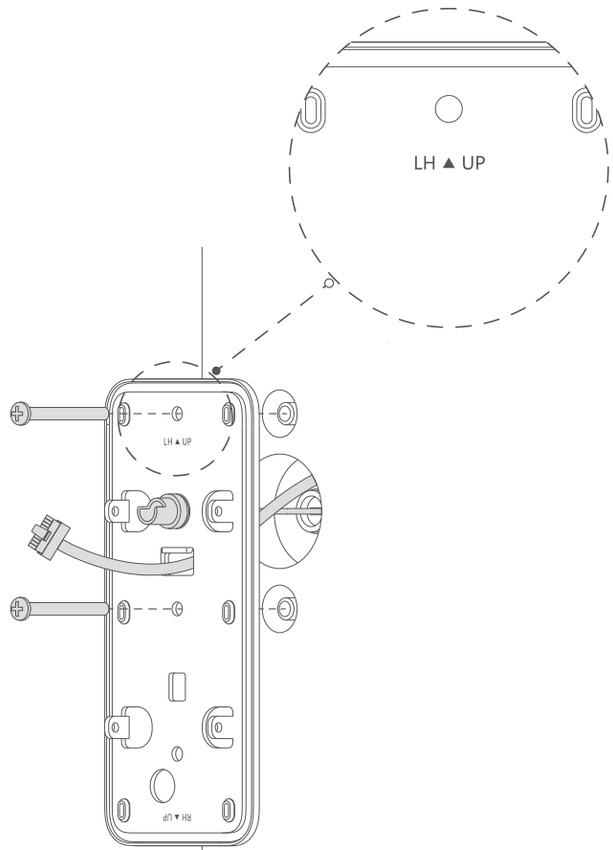

5

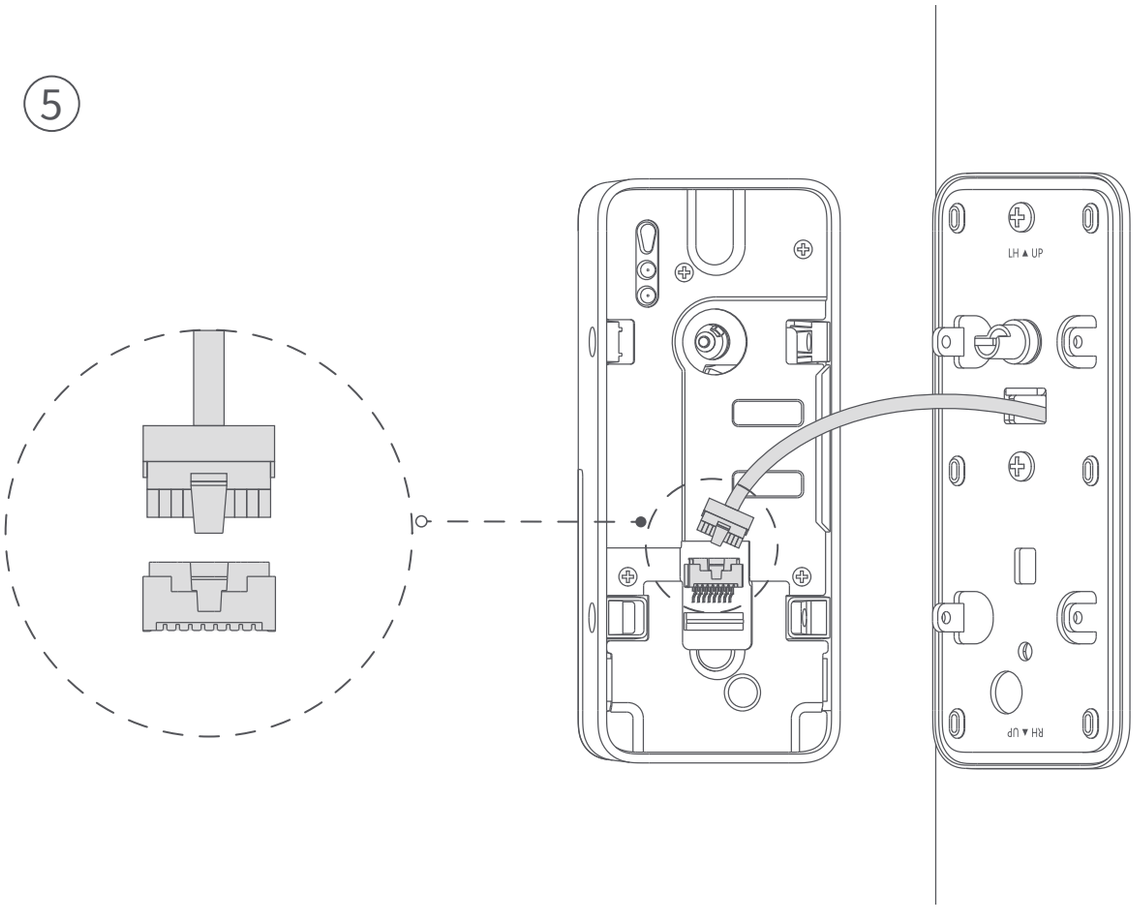

6

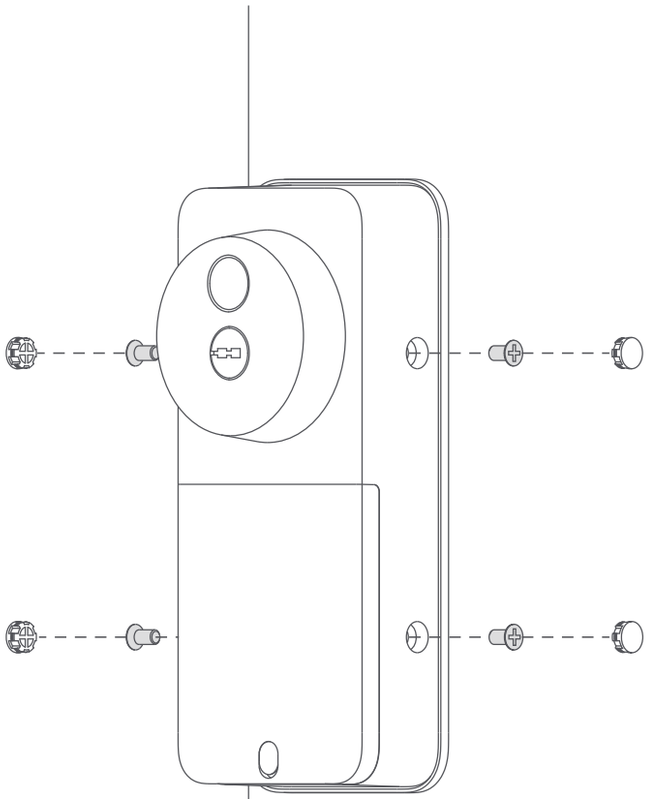

⑦

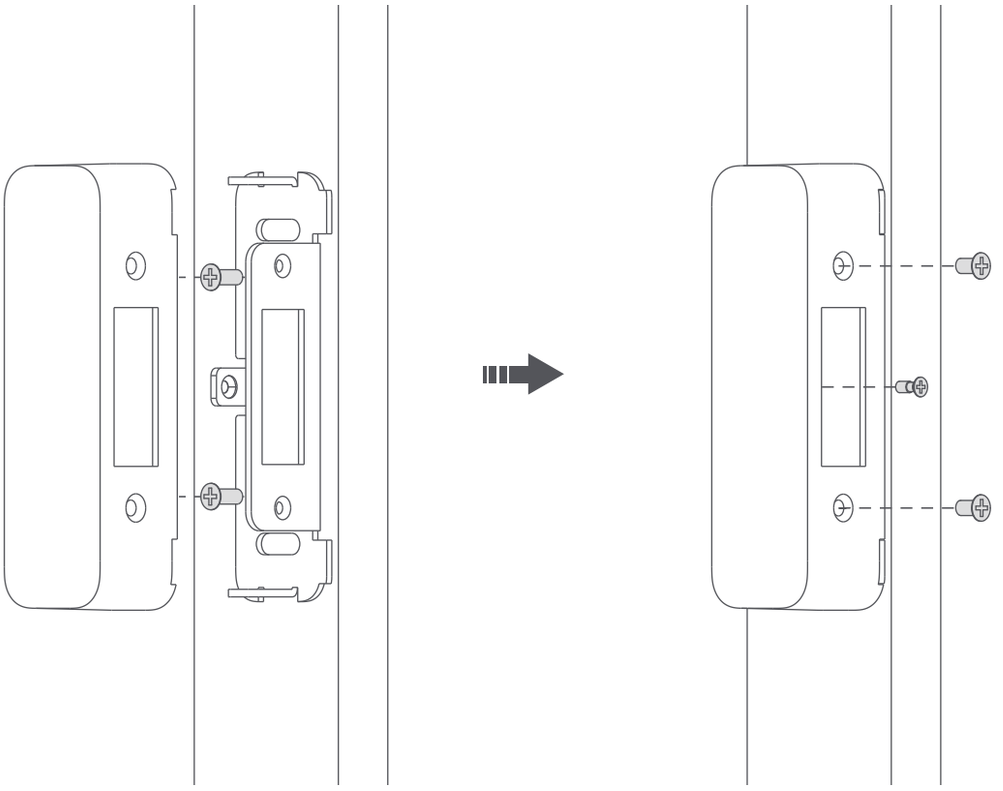

3

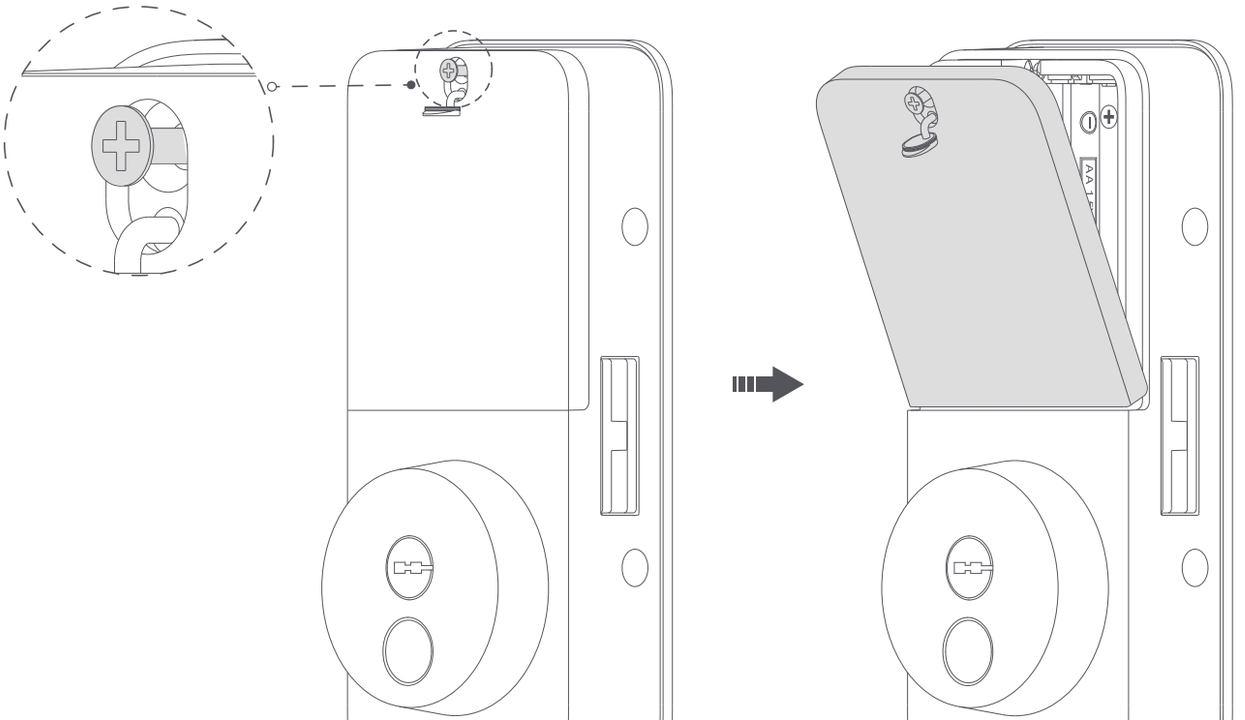

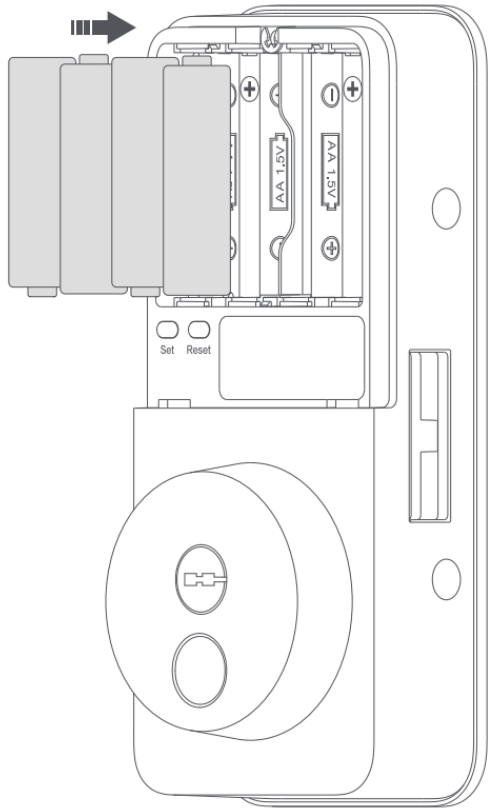

4

Aqara Home

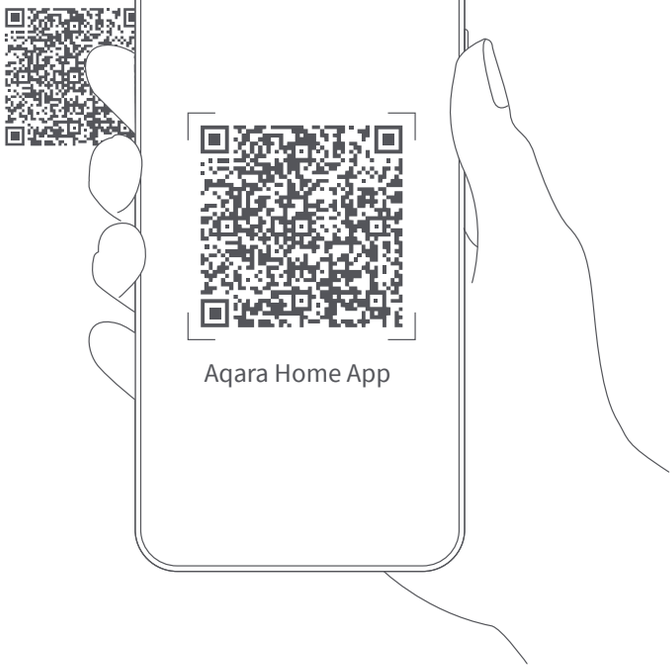

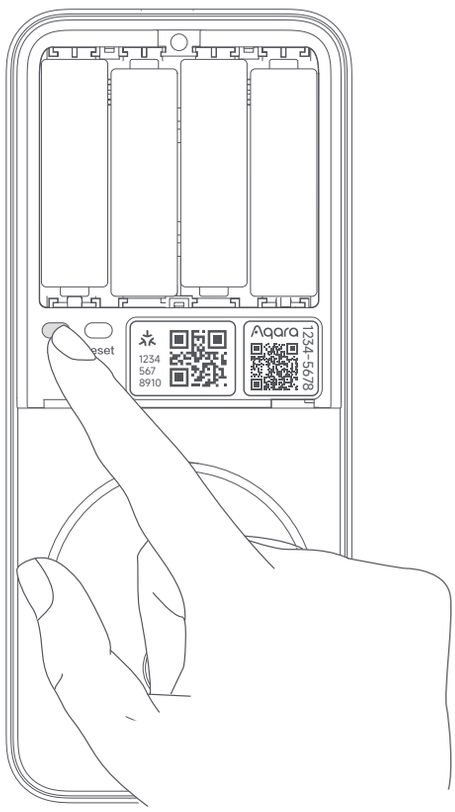

Aqara

Aqara Home

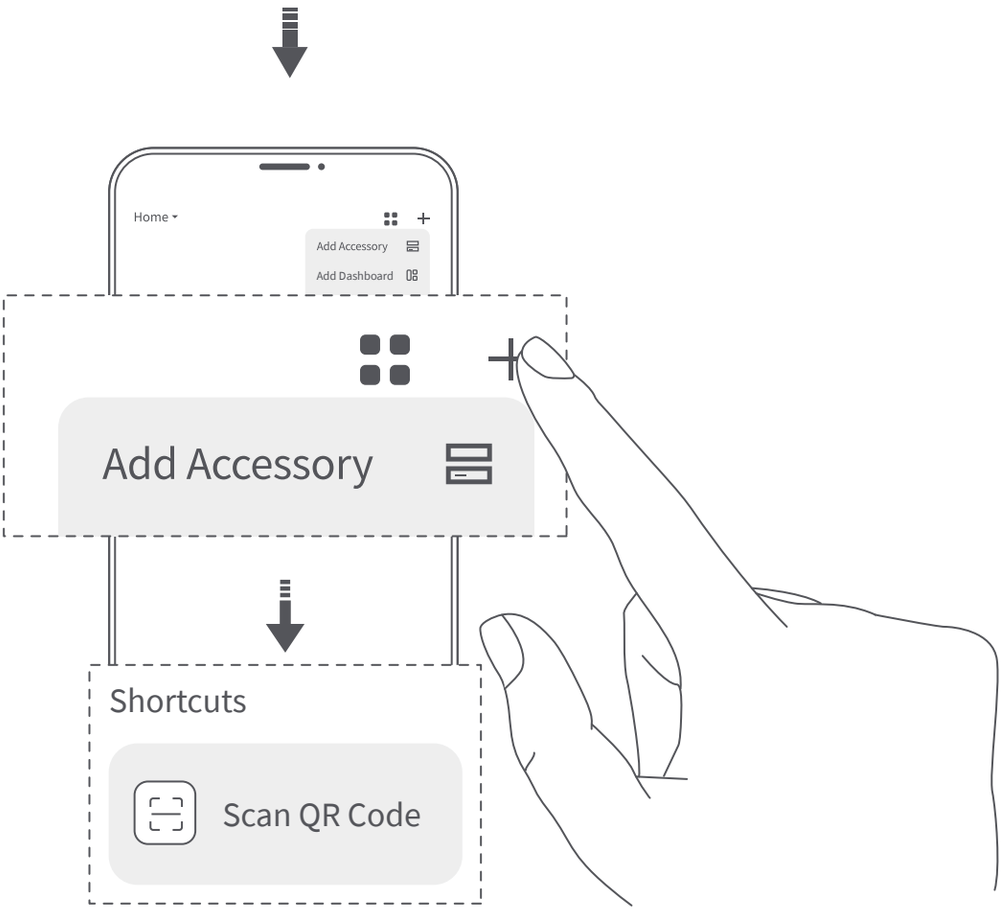

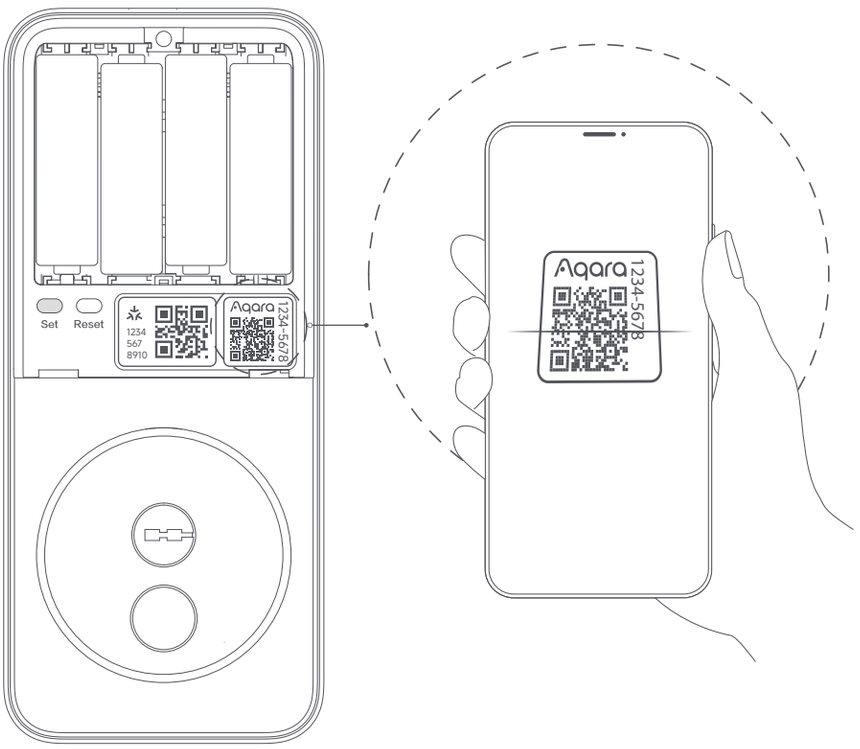

OR

Matter

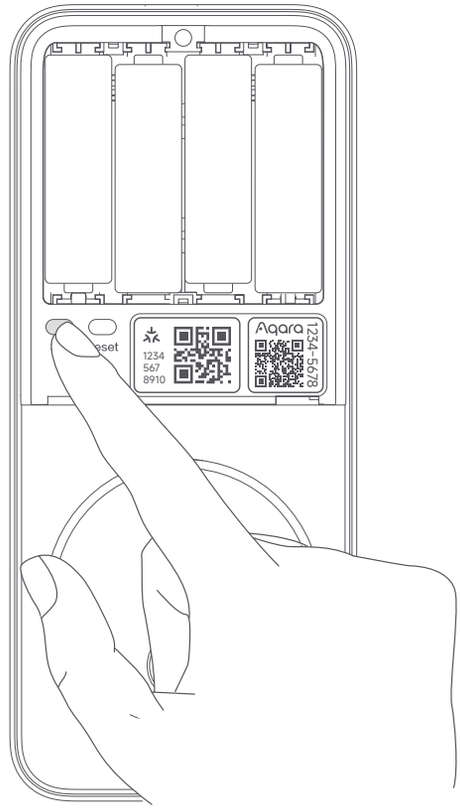

Apple Home

Amazon Alexa

SmartThings

Home Assistant

Google Home

Homey

...

A compatible 2-in-1 Matter Controller and Thread Border Router is required for binding Matter ecosystems. For full access to a specific Matter ecosystem's features, connecting via its corresponding Thread Border Router is recommended.

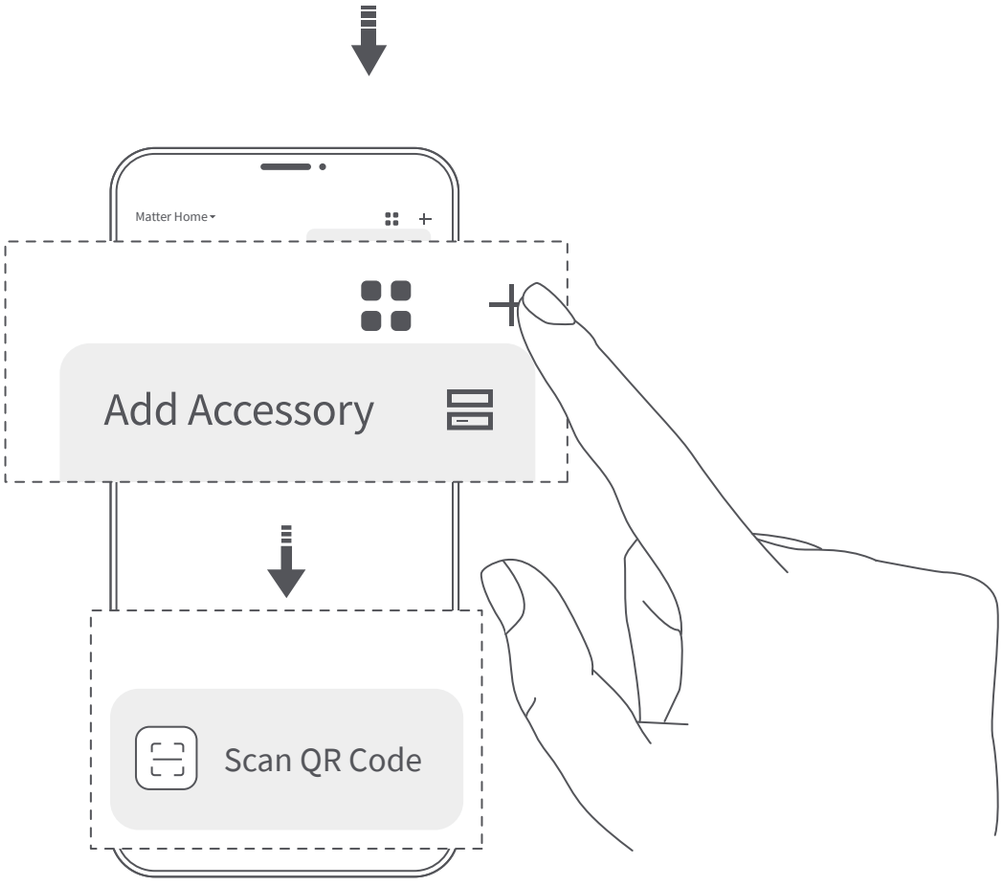
Matter Home
Add Accessory
Scan QR Code

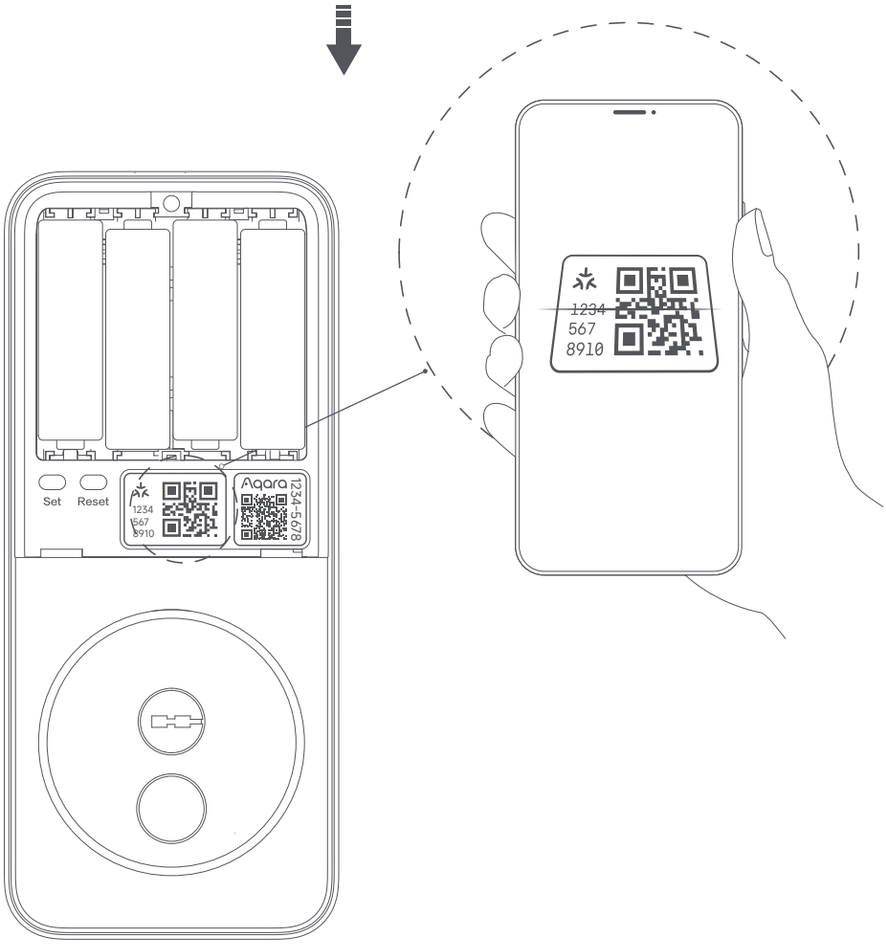
Set
Reset
1234
567
8910
Aqara
1234-5678
1234
567
8910

5

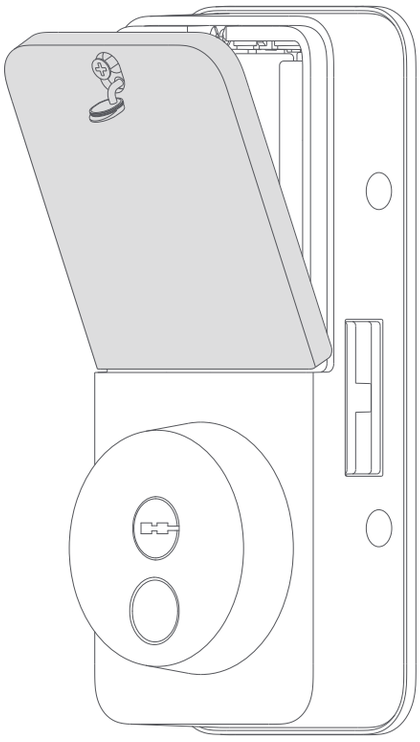

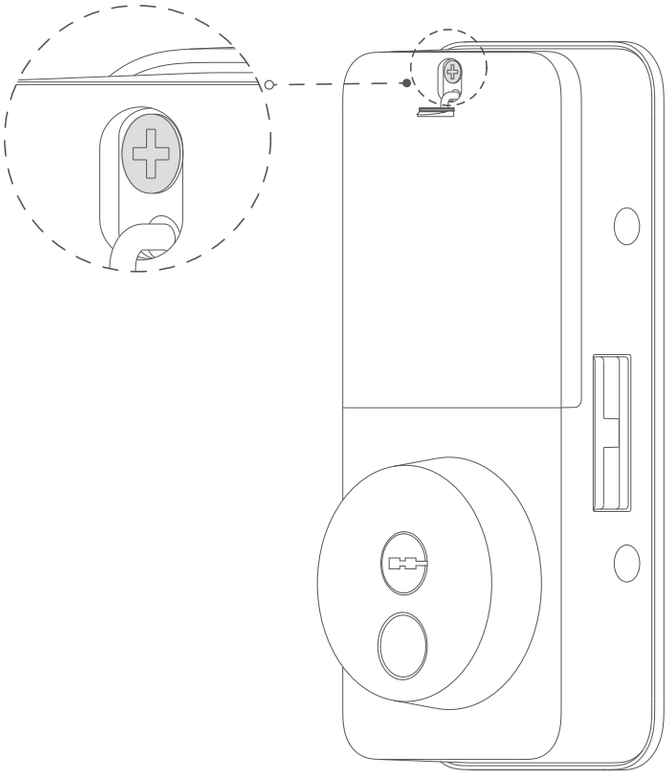

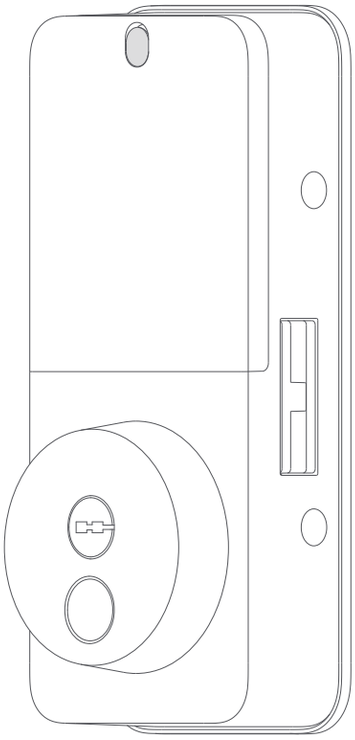

Connecting to Aqara Home

Step 1: Download the Aqara Home app from the Apple App Store, Google Play or by scanning the provided QR code.

Aqara Home

Step 2: Power on the device and then press the "Set" button once to enter pairing mode.
Step 3: Bring your phone near the device, open the app and tap "+" in the upper right corner of the homepage to enter the "Add Accessory" page.
Step 4: Select "Smart Gate Lock U500" and follow the instructions to complete the setup.

Note:
1. The actual operations are subject to change due to the updates in the Aqara Home app. Please following app's instructions.
2. Enjoy more exclusive features with the Aqara Home app without needing a hub, within Bluetooth range.
3. Bluetooth must be enabled during the binding process.

Connecting to a Matter Ecosystem

First Matter Ecosystem Binding:
1. Remove the battery cover on the inner panel.
2. Press the lock's "Set" button once to enter the lock pairing mode, then scan the Matter Pairing Code on the inner panel to add the lock in a third-party app.
Note:
1. To connect Smart Gate Lock U500, you will need a Thread-enabled Matter Controller of the desired ecosystem. Supported devices can be found on our official website: https://www.aqara.com/us/explore/everything-matter/
2. Ensure that IPv6 is enabled on your local wireless network before connecting this Matter-enabled device to your smart home. IPv6 is required for Matter ecosystem connection.
3. Make sure your phone and the Thread-enabled Matter Controller are under the same Wi-Fi network.
4. Bluetooth must be enabled during the binding process.
5. We recommend keeping the distance between the lock and the Thread-enabled Matter Controller within 5 meters. If there are obstacles (such as walls) between them, keep the distance within 3 meters.

Additional Matter ecosystems binding:
1. After this lock is connected to a third-party Matter ecosystem or an Aqara Matter Controller in the Aqara Home app, the Matter Pairing Code on the inner panel will expire.
2. To bind additional ecosystem, please generate a new pairing code in the bound app.
3. Press the lock's "Set" button once to enter pairing mode, and then use the generated Matter Pairing Code to add the device.
Note: In the early stages of the Matter ecosystem, different platforms support varying features. For example, some platforms do not support adding door lock passwords. For a better user experience, we recommend adding the device to the Aqara Home app.

Connecting to an Aqara Matter Controller

After pairing the lock in the Aqara Home app, connect an Aqara Thread-enabled Matter Controller (e.g., Hub M3) to enable remote features like Remote Periodic Password and Automations. You can also generate a Matter pairing code to connect the lock to other Matter ecosystems or directly bind the lock to the Apple Home within the Aqara Home app.
Here's how to connect an Aqara Matter Controller and bind the lock to other Matter ecosystems via the Aqara Home app:
1. In the Smart Gate Lock U500 setting page, tap "Add to Aqara Hub".
2. Tap "Connect" and follow the instructions to complete the binding.
3. Go back to the setting page and tap "Matter".
4. Tap "Matter Pairing Code" to generate a new code, or tap "Connect" to bind the device directly to the Apple Home app.
5. Scan or enter the Matter pairing code using a third-party app and follow the instructions to complete the binding.
Note:
1. Make sure your phone and Aqara Thread-enabled Matter Controller are under the same Wi-Fi network.
2. Bluetooth must be enabled during the binding process.
3. We recommend keeping the distance between the lock and the Thread-enabled Matter Controller within 5 meters. If there are obstacles (such as walls) between them, keep the distance within 3 meters.
4. Once your Aqara Matter Controller is connected, the Matter pairing code on the inner panel will expire. To bind to other Matter ecosystems, please generate a new pairing code in the Aqara Home app.

Door Lock Calibration

After installation and app connection, there are two ways to calibrate the lock: using the Aqara Home app or entering Door Lock Setup Mode.
Here's how to calibrate directly on the lock:
1. After connecting to an ecosystem, single press the "Set" Button on the lock to enter Door Lock Setup mode.
2. Press the number "5" to enter Calibration Mode, then follow the voice prompts to complete.
3. Fully open the door, then close it from inside and lock it. This will ensure the lock can correctly detect the door status.
Note:
1. To avoid being locked out, please keep a key with you before starting calibration.
2. Ensure the door is closed and unlocked before calibration
3. Aqara administrator verification is not required to enter Setup Mode if the lock is only connected to the third party Matter ecosystems.
4. Door lock will not function properly if calibration is not complete.
5. Never operate the door lock calibration function when the door lock is in a low battery state.

Adding Apple home keys (for iOS users)

After setting up Smart Gate Lock U500 in the "Home" app, add a home key to the "Wallet" app for easy and secure access to your home using your iPhone or Apple Watch:

1. Control of this accessory requires a Thread-enabled home hub such as Apple TV 4K, HomePod (2nd generation), HomePod mini, or a compatible third-party Thread border router running the latest software. Tap to unlock with home key is available for iPhone XS and later running iOS 18.6 or later and Apple Watch Series 6 and later running watchOS 11.5 or later.
2. After connecting to Apple Home, the "Wallet" app will automatically generate the Apple home keys.
3. Apple, Apple Home, Apple Watch, HomePod, HomePod mini and iPhone are trademarks of Apple Inc., registered in the U.S. and other countries and regions. The Works with Apple Home badge is a trademark of Apple Inc.
4. Use of the Works with Apple badge means that an accessory has been designed to work specifically with the technology identified in the badge and has been certified by the developer to meet Apple performance standards. Apple is not responsible for the operation of this device or its compliance with safety and regulatory standards.

Door Lock Local Settings

Buttons	Features	Operations
"0~9" Numeric Keypad	Enter Numbers	Single press any number.
	One-Time Quiet Unlock	Long press any number: Silences the keypad sound for a single unlocking attempt. The sound will be restored automatically after a successful unlock or activating the keypad again.
Confirm/Lock Button	Lock	Single press the Lock Button.
	Verify Password	Single press the Confirm Button after entering the password.
Set Button	Enter Pairing Mode	Single press the Set Button: Initiate pairing mode, allowing the app to connect with the door lock within 10 minutes.
	Enter Door Lock Setup Mode	Single press (after connecting to the app): If an Aqara administrator has been set, the administrator's credential verification is required. If no Aqara administrator has been set, the lock will automatically enter setup mode.
Reset Button	Reset Door Lock	Long press for 5 seconds: If an Aqara administrator has been set, the administrator's credential verification is required. If no Aqara administrator has been set, it will reset after you confirm.
Inner Panel Fingerprint	Unlock	Unlock with enrolled fingerprints.
	Lock	Lock with any fingerprint.

Door Lock Setup Mode

To enter the door lock setup mode:

1. After adding your door lock to the app, single press the "set" button on the lock.
2. Verify the Aqara administrator's fingerprints or passwords to enter the setup mode.
3. Follow the voice instructions to select desire features.

Note: If connected only to the Matter ecosystem, administrator verification is not required to access the setup mode.

Setup Mode Features	Operations
Add User	Press 1: Add users and register fingerprints and passwords
Delete User	Press 2: Remove users and their credentials
Adjust Volume & Language	Press 3: Customize volume and language settings
Reset Matter Binding	Press 4: Clear all Matter configuration
Door Lock Calibration	Press 5: Calibrate the door lock

Auto-Lock

Auto-Lock on Close	Once door is closed, it automatically locks after a set time.
Safety Re-Lock	After a remote, automation, or 3rd party unlocking, the door will automatically re-lock if not opened.

1. To adjust the Auto-Lock settings, please add the lock to the Aqara Home app. You can set your preferred re-lock delay by adjusting the Auto-Lock Timer in the app.
2. When the Auto-Lock Timer is set to Immediately, please ensure the lock is fully engaged before leaving.
3. If the lock does not automatically lock after the door is closed, please recalibrate the lock. After the calibration, fully open the door, then close it from inside and lock it. This helps ensure the lock can correctly detect the door status.

Product Specification

Model	**DL-D18D**
Operating Temperature	Inner Panel: -18°C ~ +50°C Outer Panel: -35°C ~ +66°C
Operating Humidity	0 ~ 93% RH, no condensation
Powering Modes	4 LR6 AA 1.5V Batteries ⎓ Type-C Power Supply 5V ⎓1A
Wireless Protocols	Bluetooth, Thread, NFC
Dimensions	Inner Panel: 167.5 × 72.9 × 49 mm Outer Panel: 148.7 × 71.7 × 27.3 mm
IP Rating (Outer Panel)	IP65

If you have any questions or encounter any issues while setting up your device, you may refer to the FAQ, user manual and installation video by scanning the QR code below, or visit our website for further assistance.

Aqara Home

Product Support

Online Customer Service: www.aqara.com/en/support.html
Manufacturer: Lumi United Technology Co., Ltd.
Address: Room 801-804, Building 1, Chongwen Park, Nanshan iPark, No. 3370, Liuxian Avenue, Fuguang Community, Taoyuan Residential District, Nanshan District, Shenzhen, China
Email: support@aqara.com